TAMA THE CLASSIC STAND (HH55F)

INSTRUCTION MANUAL

Thank you for your purchase of this TAMA Hi-hat stand. To ensure safe and efficient use of this product, please read through this manual before beginning use.

Accessories

- Instruction manual x1
- Safety notes x1

Assembly

- Loosen the T-bolt (A) to remove the hi-hat clutch from the upper pull rod, then pull the rod out of the tube.
- Loosen the T-bolt (D), then extend the tripod legs to stand the bottom section upright. Ensure the slider is lowered to meet the pin, and retighten the T-bolt (D).
- To secure the footboard to the frame, insert the radius rod into the holes at the base of the frame, as shown in Fig. 2.
- To prevent the stand from moving while playing, there are two spikes in the bottom of the frame. By turning the screws clockwise, the spikes can be extended as needed.

Note

Please note that the spikes can scratch certain floor surfaces. When using the spikes, we recommend placing a rug or mat down on the floor.

- Screw the pull rod into the hex nut on top of the bottom section (Fig.3). The rod should be secured tightly in place to prevent it from becoming loose while playing.
- Fit the upper tube over the pull rod and insert into the lower tube, adjust the upper tube to the desired height, then fasten the T-nut (B) and square-headed bolt (C) of the memory lock.
- Set the Bottom Cymbal of the hi-hat on the felt of the cymbal seat.

Install the top cymbal

- Remove the lower nut and felt washer from the clutch.
- Place the Top Cymbal of the Hi-hat between the two felt washers. Then tighten the lower nut firmly.
- Adjust the tightness of the Top cymbal using the Adjusting nut and the Lock nut.
- Position the clutch & Top Hi-hat cymbal on the pull rod. Tighten the T-bolt (A) to set the desired height and playing position. A typical setup leaves a gap of around 1 inch between the top and bottom cymbals when the footboard is in the raised position.

Note

The protection sleeve (SLC085) can be replaced when it becomes worn or stripped. To avoid damage to the cymbal, periodically check the condition of the sleeve.

Adjusting the bottom cymbal seat

- By tilting the bottom cymbal slightly, you can adjust the sound of hi-hat cymbals. By turning the adjusting bolt counterclockwise, you can tilt the bottom cymbal. (Fig.5)

Adjusting the spring tension and footboard angle

- The spring tension can be adjusted by sliding the spring tension lock. Fig.6 shows the default factory position, which has the loosest spring tension.
- If you want to tighten the spring tension, press down on the footboard and loosen the square head bolt (E). Then, slide the spring tension lock up towards the bottom end of lower tube. Then, retighten the bolt (E) to secure the spring tension lock (Fig.7).
- If you feel that the spring tension is too high, then lower the spring tension lock to find your desired tension.
- When you tighten the spring tension, the footboard is lowered. If needed, adjust the footboard angle by following the procedure below.
- As shown in Figure 6, the lower pipe factory set-up is about 20 mm (3/4") away from the pipe holder.
- To adjust the footboard angle, loosen the square head bolt (F), and pull the lower tube up or down. Once you reach the desired angle, retighten the bolt (F).

Packing and transportation

- When storing the stand, remove the upper tube and unscrew the upper pull rod. Invert and slide the top of the upper pull rod through the top of the upper tube and fasten the Hi-Hat clutch to pull rod to secure it inside the upper tube. This prevents the rod from getting bent or damaged during transport.
- The two bolts on the bottom side of the footboard act as radius rod holders. When transporting the stand, hook the radius rods to the holders as shown in Fig. 8 to prevent them from bending.

Part Names

Fig.1

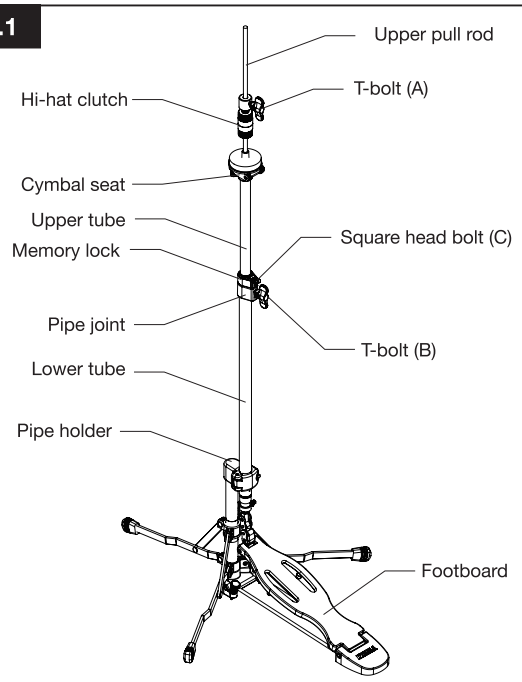

Fig.2

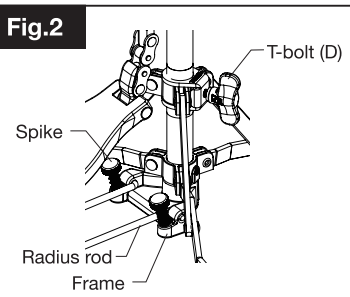

Fig.3

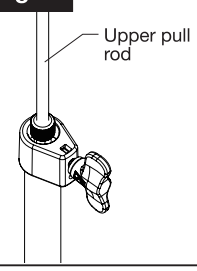

Fig.4

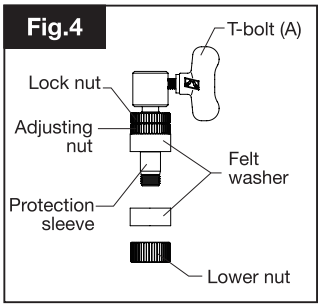

Fig.5

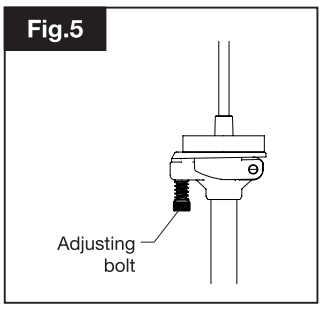

Fig.6

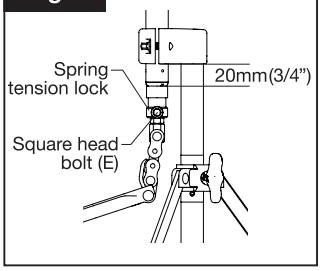

Fig.7

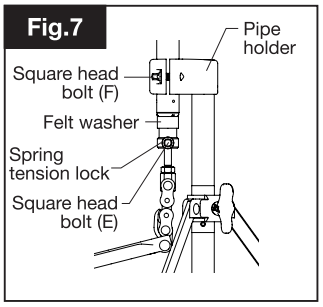

Fig.8

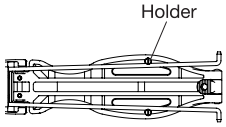

TAMA® HOSHINO GAKKI CO.,LTD.
星野楽器株式会社 〒461-8717 愛知県名古屋市東区橦木町 3-22
http://www.tama.com/

■ This instruction manual is issued in November 2017. Specification and design are subject to change without notice.

TSHH55F17K